Cambridge International Examinations
Cambridge International General Certificate of Secondary Education

CANDIDATE NAME	
CENTRE NUMBER	
CANDIDATE NUMBER	

PHYSICS **0625/43**

Paper 4 Theory (Extended) **October/November 2018**

1 hour 15 minutes

Candidates answer on the Question Paper.

No Additional Materials are required.

READ THESE INSTRUCTIONS FIRST

Write your Centre number, candidate number and name on all the work you hand in.
Write in dark blue or black pen.
You may use an HB pencil for any diagrams or graphs.
Do not use staples, paper clips, glue or correction fluid.
DO **NOT** WRITE IN ANY BARCODES.

Answer **all** questions.
Electronic calculators may be used.
You may lose marks if you do not show your working or if you do not use appropriate units.
Take the weight of 1.0 kg to be 10 N (acceleration of free fall = 10 m/s^2).

At the end of the examination, fasten all your work securely together.
The number of marks is given in brackets [ ] at the end of each question or part question.

This syllabus is approved for use in England, Wales and Northern Ireland as a Cambridge International Level 1/Level 2 Certificate.

This document consists of **14** printed pages and **2** blank pages.

DC (NH/SW) 151946/4
© UCLES 2018

CAMBRIDGE International Examinations

[Turn over

www.root19.com +91 - 9969 353 391

1 Fig. 1.1 is the distance-time graph for a moving car.

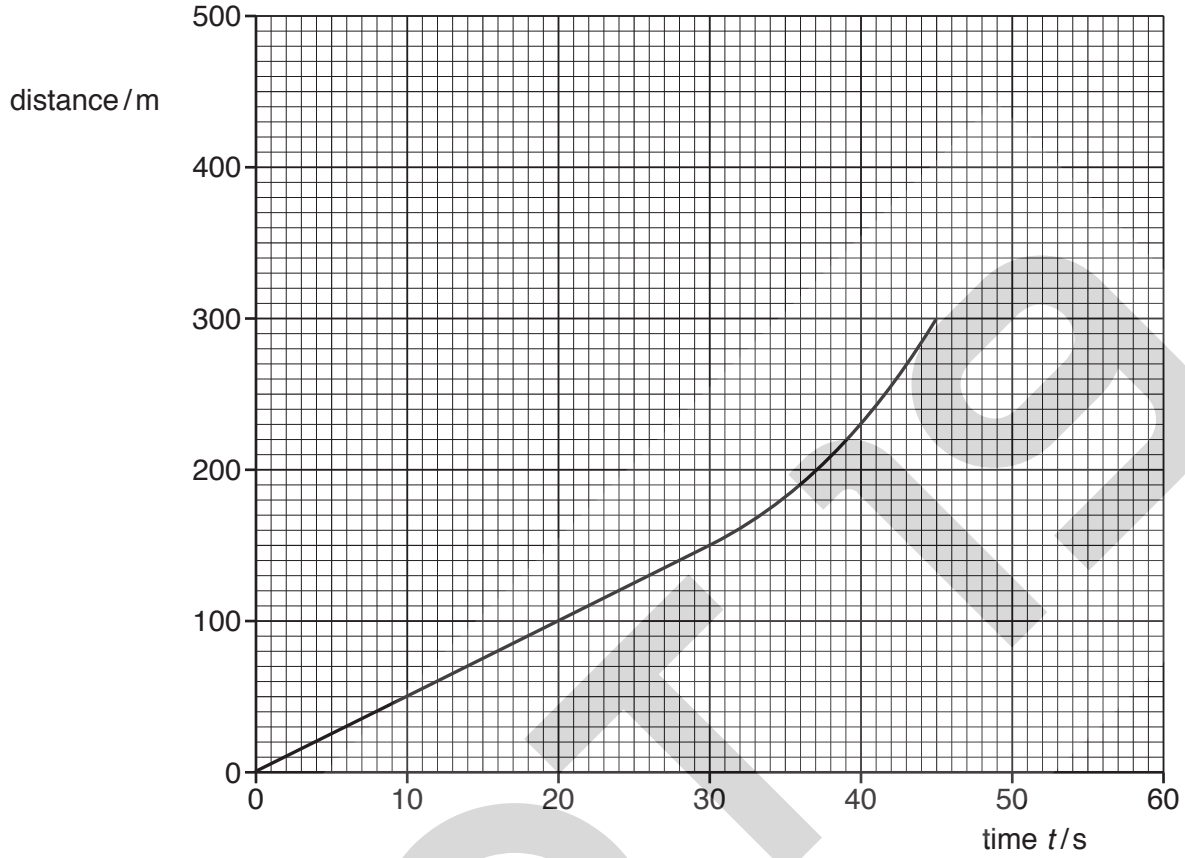

Fig. 1.1

(a) On Fig. 1.1, mark a point P where the acceleration of the car is zero. [1]

(b) Determine:

(i) the speed of the car at time $t = 15\,s$

speed = ...[2]

(ii) the average speed of the car between time $t = 30\,s$ and time $t = 45\,s$.

average speed = ...[2]

(c) At time $t = 45\,s$, the car starts to decelerate. At time $t = 55\,s$ and at a distance of 400 m from the starting point, the car stops. It then remains stationary for 5.0 s.

On Fig. 1.1, draw a possible continuation of the distance-time graph. [3]

[Total: 8]

www.root19.com +91 - 9969 353 391

2 **(a)** Complete Fig. 2.1 by writing in the right-hand column the name of the quantity given by the product in the left-hand column.

product	quantity
mass × acceleration	
force × time	

[2]

Fig. 2.1

(b) Fig. 2.2 shows a man hitting a ball with a golf club.

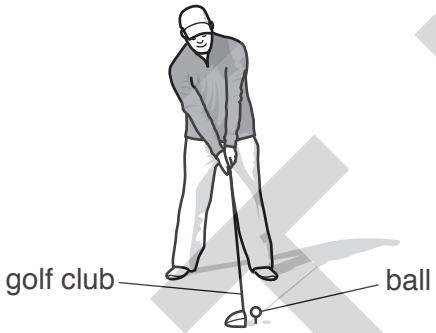

Fig. 2.2

The ball has a mass of 0.046 kg. The golf club is in contact with the ball for 5.0×10^{-4} s and the ball leaves the golf club at a speed of 65 m/s.

(i) Calculate:

1. the momentum of the ball as it leaves the golf club

momentum = ...[2]

2. the average resultant force acting on the ball while it is in contact with the golf club.

average force = ...[2]

(ii) While the golf club is in contact with the ball, the ball becomes compressed and changes shape.

State the type of energy stored in the ball during its contact with the golf club.

.....[1]

[Total: 7]

www.root19.com +91 - 9969 353 301

3 The density of mercury is 1.4×10^4 kg / m^3.

(a) Fig. 3.1 shows an instrument that is being used to determine the atmospheric pressure.

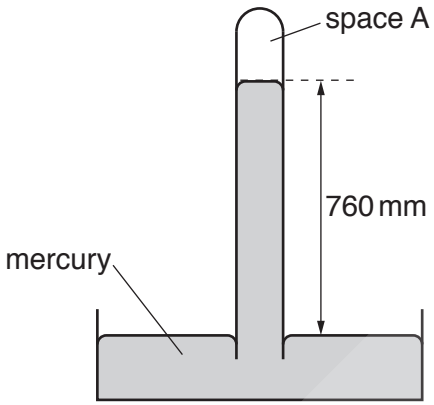

Fig. 3.1 (not to scale)

(i) State the name of the instrument.

.....[1]

(ii) State what is in space A.

.....[1]

(iii) Calculate the atmospheric pressure.

atmospheric pressure = ...[2]

(b) Fig. 3.2 shows mercury stored in a cylindrical glass jar of internal radius 4.0 cm. The depth of mercury in the jar is 12 cm.

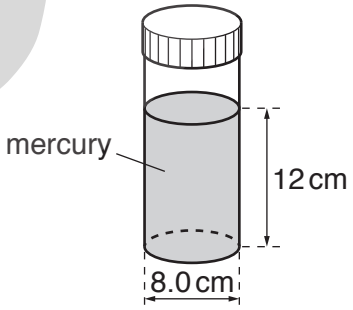

Fig. 3.2 (not to scale)

Calculate the weight of mercury in the jar.

weight = ...[3]

[Total: 7]

www.root19.com +91 - 9969 353 391

4 A wave is travelling across the surface of water in a tank at a speed of 0.15 m/s.

(a) The wavelength of the wave is 0.030 m.

Calculate the frequency of the wave.

frequency = ...[2]

(b) This water wave is a transverse wave.

(i) Explain what is meant by the term *transverse wave motion*.

.....

.....

.....

.....[3]

(ii) Draw a diagram that represents a transverse wave travelling from left to right across the page. On your diagram, label:

- the wavelength
- the amplitude.

[3]

[Total: 8]

© UCLES 2018
www.root19.com

+91 - 9969 353 301

5 **(a)** A student is supplied with a small block of iron, a thermometer and an electrical heater of power *P*.

There are two holes drilled in the iron block. The heater fits tightly into one hole and the student places the thermometer into the other hole.

Fig. 5.1 shows the equipment.

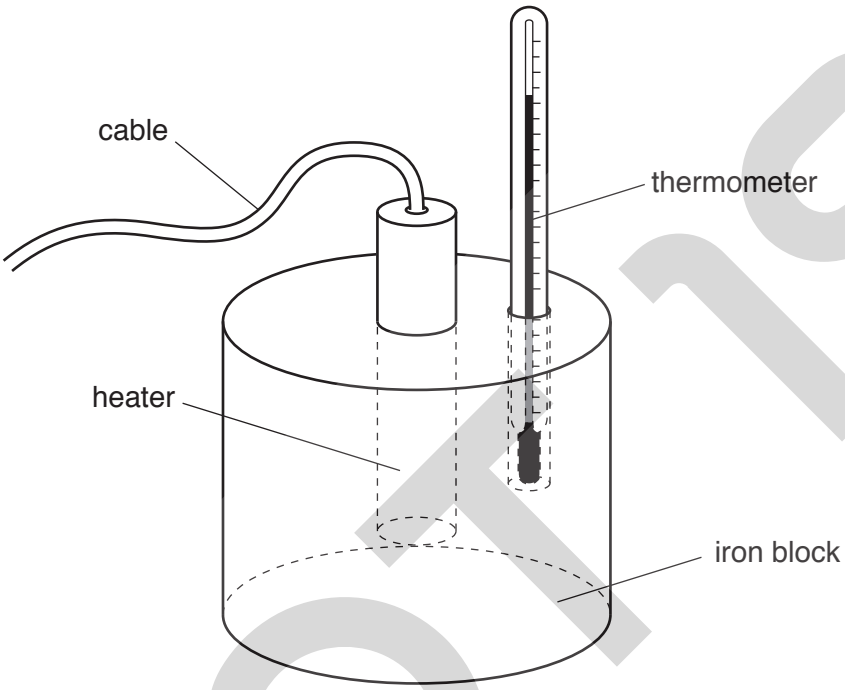

Fig. 5.1

The student uses this equipment when determining the specific heat capacity of iron.

State:

- the other equipment the student will need
- the measurements the student needs to take
- the equation used when calculating the value of the specific heat capacity of iron.

.....

.....

.....

.....

.....

.....

.....

.....[4]

www.root19.com +91 - 9969 353 391

(b) In the student's home there is a wood-burning stove, which is also made of iron. The mass of the wood-burning stove is 85 kg.

(i) State what is meant by the *thermal capacity* of an object.

.....

.....[1]

(ii) The specific heat capacity of iron is 460 J / (kg °C).
Calculate the thermal capacity of the wood-burning stove.

thermal capacity = ...[2]

[Total: 7]

© UCLES 2018

www.root19.com +91 - 9969 353 301

6 **(a)** Fig. 6.1 shows white light incident at point X on a glass prism.

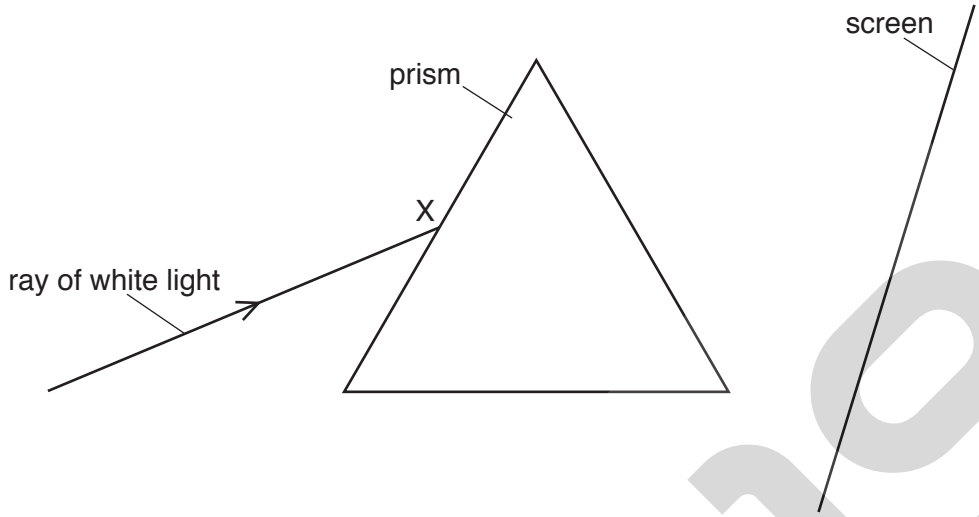

Fig. 6.1

(i) From point X on Fig. 6.1, draw a ray of red light, labelled R and a ray of violet light, labelled V, to show how a spectrum is formed on the screen. [2]

(ii) State the colour of light in the visible spectrum with the shortest wavelength.

.....[1]

(b) The critical angle for a type of glass is 42°.

Fig. 6.2 and Fig. 6.3 show two prisms ABC and PQR made of this type of glass. A ray of monochromatic red light passes into each of the prisms.

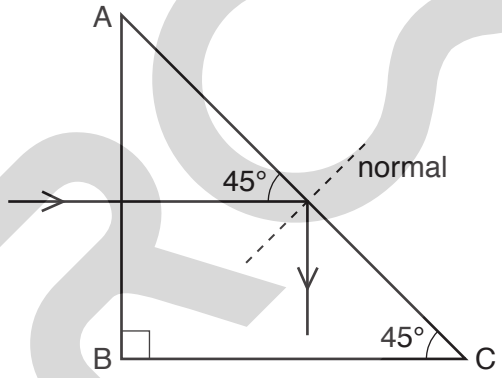

Fig. 6.2

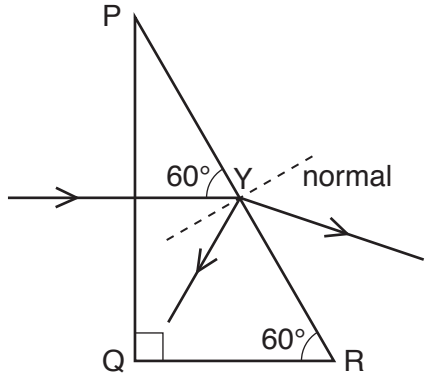

Fig. 6.3

(i) State what is meant by *monochromatic* light.

.....

.....[1]

www.root19.com +91 - 9969 353 391

(ii) Describe and explain what happens to the ray of light in Fig. 6.2 as it strikes side AC of the prism.

.....

.....

.....[2]

(iii) Describe and explain what happens to the ray of light in Fig. 6.3 as it strikes the glass at point Y.

.....

.....

.....

.....[3]

[Total: 9]

© UCLES 2018
www.root19.com

+91 - 9969 353 301

7 A defibrillator is a machine that sends an electrical charge through the heart of a patient whose heart is not beating correctly. Doctors learn to use a defibrillator by practising on a medical dummy.

Fig. 7.1 shows the two contacts of a defibrillator attached to a medical dummy.

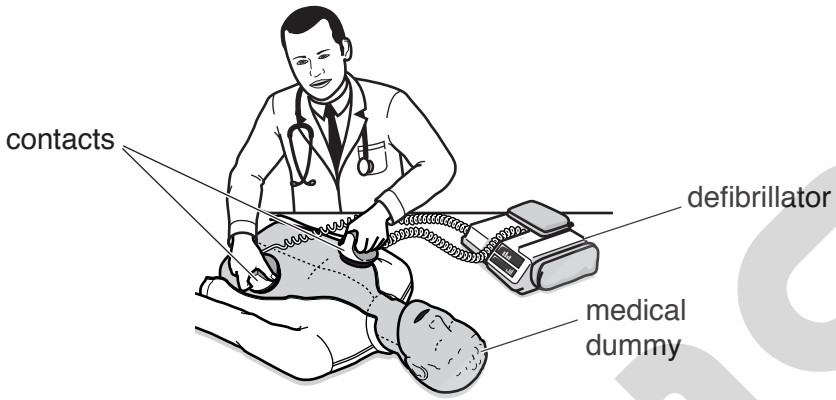

Fig. 7.1

The contacts that touch the dummy are made from metal, and when the defibrillator is being used, one contact becomes strongly negatively charged and the other contact becomes strongly positively charged. The handles of the contacts are made from plastic, which is an electrical insulator.

(a) **(i)** State how the structure of an electrical insulator differs from the structure of a conductor.

.....

.....[1]

(ii) Suggest why the handles are made from an electrical insulator.

.....

.....

.....[2]

(b) Explain, in terms of the particles involved, how one contact becomes negatively charged and how the other contact becomes positively charged.

.....

.....

.....[2]

(c) The defibrillator passes a charge of 9.1×10^{-3} C through the medical dummy in 6.5×10^{-4} s.

Calculate the average current in the dummy.

current = ...[2]

[Total: 7]

© UCLES 2018
www.root19.com

+91 - 9969 353 391

8 A 9.0 V battery is connected to a 120 Ω resistor in series with wire P.
Fig. 8.1 shows a voltmeter connected across the 120 Ω resistor.

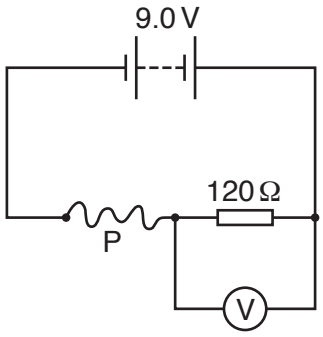

Fig. 8.1

(a) State the energy changes that are taking place in the circuit.

.....

.....

.....[2]

(b) The reading on the voltmeter is 2.4 V.

Calculate:

(i) the current in the 120 Ω resistor

current = ...[2]

(ii) the potential difference (p.d.) across wire P

p.d. = ...[1]

(iii) the resistance of wire P.

resistance = ...[1]

(c) Wire P has a diameter d and a length l. A second piece of wire Q is made of the same material as P.
The diameter of wire Q is $0.50 \times d$ and its length is $5.0 \times l$.

Calculate the resistance of wire Q.

resistance = ...[4]

[Total: 10]

www.root19.com +91 - 9969 353 301

9 **(a)** Describe how a direct current (d.c.) differs from an alternating current (a.c.).

.....

.....[1]

(b) Fig. 9.1 shows how the voltage output of an a.c. generator varies with time.

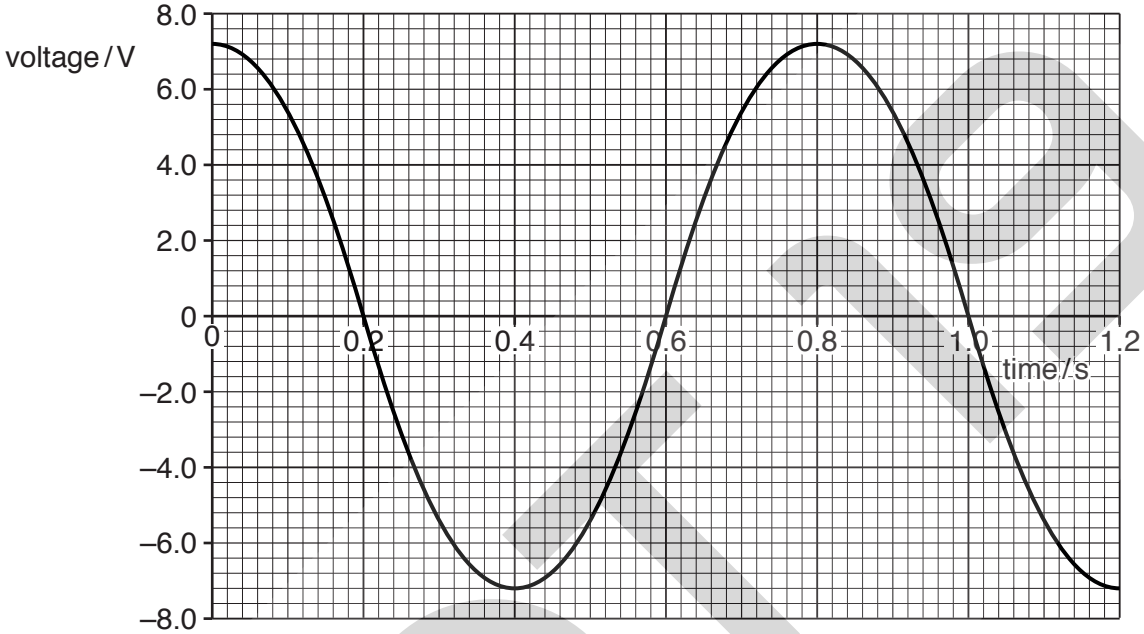

Fig. 9.1

A heater is connected directly to the a.c. generator and the maximum current in the heater is 0.75 A.

(i) On Fig. 9.2, sketch a graph to indicate how the current in the heater varies with time.

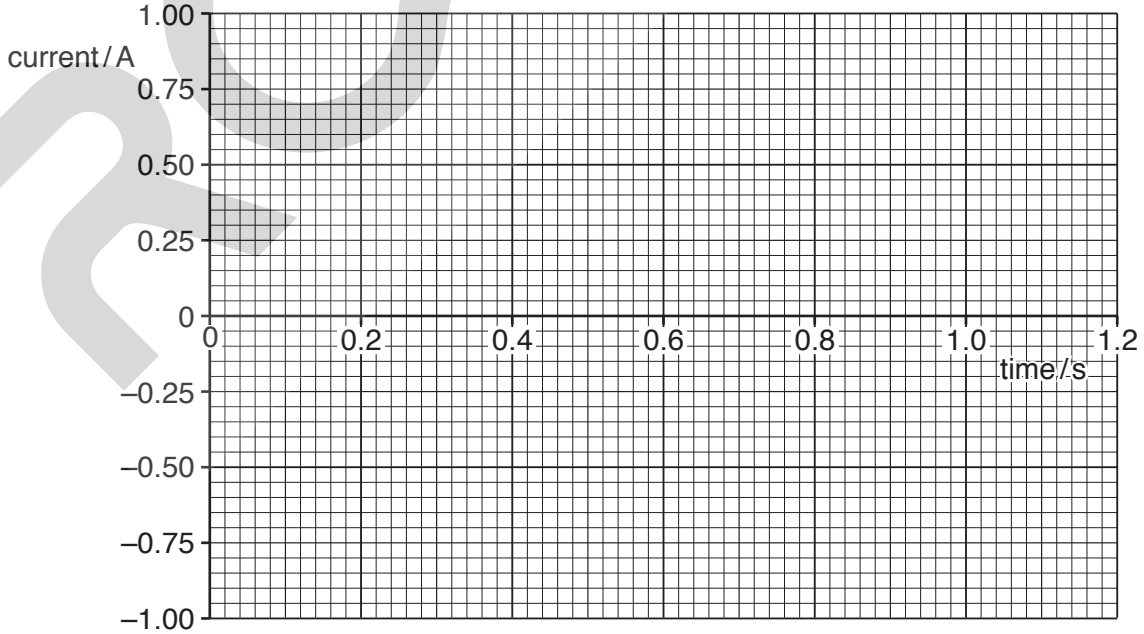

[1]

Fig. 9.2

www.root19.com +91 - 9969 353 391

(ii) Calculate the power produced by the heater when the current is 0.75 A.

power = ...[2]

(c) Fig. 9.3 shows the coil ABCD of the a.c. generator between two magnetic poles.

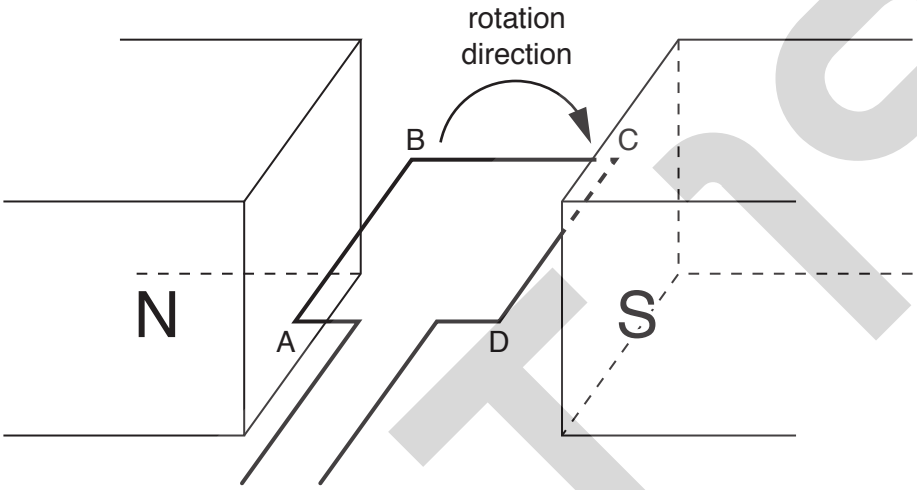

Fig. 9.3

(i) On Fig. 9.3, draw a straight arrow to indicate the direction in which side AB of the coil is moving. Label this arrow M. [1]

(ii) Deduce the direction of the current induced in side AB of the coil and explain your reasoning.

.....

.....

.....

.....[2]

(iii) The rate at which the coil of the a.c. generator rotates increases.

State **two** ways in which the alternating voltage changes.

1. .....

.....

2. .....

.....

[2]

[Total: 9]

www.root19.com +91 - 9969 353 301

10 Thorium-234 ($^{234}_{90}Th$) is radioactive. It decays by β-emission to form an isotope of protactinium (Pa).

(a) Complete the nuclide equation for this decay.

$$^{234}_{90}Th \longrightarrow {}^{\cdots\cdots}_{\cdots\cdots}Pa + {}^{\cdots\cdots}_{\cdots\cdots}\beta$$

[2]

(b) A pure sample of thorium-234 emits β-particles at a count rate of 2480 counts / second. The half-life of thorium-234 is 24 days.

Calculate the count rate for the emission of β-particles from the thorium in the sample after 72 days have passed.

count rate .....[3]

(c) The isotope of protactinium in **(a)** is also radioactive. It decays by β-emission and has a half-life of 70 seconds.

State and explain how this would affect the **observed** count rate for the sample in **(b)** after 72 days.

.....

.....

.....

.....[3]

[Total: 8]

© UCLES 2018
www.root19.com

+91 - 9969 353 391

BLANK PAGE

© UCLES 2018
www.root19.com

+91 - 9969 353 391

BLANK PAGE

Permission to reproduce items where third-party owned material protected by copyright is included has been sought and cleared where possible. Every reasonable effort has been made by the publisher (UCLES) to trace copyright holders, but if any items requiring clearance have unwittingly been included, the publisher will be pleased to make amends at the earliest possible opportunity.

To avoid the issue of disclosure of answer-related information to candidates, all copyright acknowledgements are reproduced online in the Cambridge International Examinations Copyright Acknowledgements Booklet. This is produced for each series of examinations and is freely available to download at www.cie.org.uk after the live examination series.

Cambridge International Examinations is part of the Cambridge Assessment Group. Cambridge Assessment is the brand name of University of Cambridge Local Examinations Syndicate (UCLES), which is itself a department of the University of Cambridge.

www.root19.com +91 - 9969 353 391